Cambridge Assessment International Education

Cambridge International AS & A Level

PHYSICS **9702/11**

Paper 1 Multiple Choice **May/June 2023**

1 hour 15 minutes

You must answer on the multiple choice answer sheet.

You will need: Multiple choice answer sheet
Soft clean eraser
Soft pencil (type B or HB is recommended)

INSTRUCTIONS

- There are **forty** questions on this paper. Answer **all** questions.
- For each question there are four possible answers **A**, **B**, **C** and **D**. Choose the **one** you consider correct and record your choice in soft pencil on the multiple choice answer sheet.
- Follow the instructions on the multiple choice answer sheet.
- Write in soft pencil.
- Write your name, centre number and candidate number on the multiple choice answer sheet in the spaces provided unless this has been done for you.
- Do **not** use correction fluid.
- Do **not** write on any bar codes.
- You may use a calculator.

INFORMATION

- The total mark for this paper is 40.
- Each correct answer will score one mark.
- Any rough working should be done on this question paper.

This document has **20** pages. Any blank pages are indicated.

© UCLES 2023

Data

acceleration of free fall	$g = 9.81\,\text{m s}^{-2}$
speed of light in free space	$c = 3.00 \times 10^{8}\,\text{m s}^{-1}$
elementary charge	$e = 1.60 \times 10^{-19}\,\text{C}$
unified atomic mass unit	$1\,\text{u} = 1.66 \times 10^{-27}\,\text{kg}$
rest mass of proton	$m_\text{p} = 1.67 \times 10^{-27}\,\text{kg}$
rest mass of electron	$m_\text{e} = 9.11 \times 10^{-31}\,\text{kg}$
Avogadro constant	$N_\text{A} = 6.02 \times 10^{23}\,\text{mol}^{-1}$
molar gas constant	$R = 8.31\,\text{J K}^{-1}\,\text{mol}^{-1}$
Boltzmann constant	$k = 1.38 \times 10^{-23}\,\text{J K}^{-1}$
gravitational constant	$G = 6.67 \times 10^{-11}\,\text{N m}^2\,\text{kg}^{-2}$
permittivity of free space	$\varepsilon_0 = 8.85 \times 10^{-12}\,\text{F m}^{-1}$ $\left(\frac{1}{4\pi\varepsilon_0} = 8.99 \times 10^{9}\,\text{m F}^{-1}\right)$
Planck constant	$h = 6.63 \times 10^{-34}\,\text{J s}$
Stefan–Boltzmann constant	$\sigma = 5.67 \times 10^{-8}\,\text{W m}^{-2}\,\text{K}^{-4}$

Formulae

uniformly accelerated motion	$s = ut + \frac{1}{2}at^2$ $v^2 = u^2 + 2as$
hydrostatic pressure	$\Delta p = \rho g \Delta h$
upthrust	$F = \rho g V$
Doppler effect for sound waves	$f_\text{o} = \frac{f_\text{s} v}{v \pm v_\text{s}}$
electric current	$I = Anvq$
resistors in series	$R = R_1 + R_2 + \ldots$
resistors in parallel	$\frac{1}{R} = \frac{1}{R_1} + \frac{1}{R_2} + \ldots$

© UCLES 2023

1 Which unit is **not** an SI base unit?

A A **B** kg **C** C **D** s

2 What is the best estimate of the number of atoms in a piece of metal of volume 50 cm^3?

A 5×10^{15} **B** 5×10^{25} **C** 5×10^{29} **D** 5×10^{31}

3 A copper pipe has a true diameter of 42.03 mm.

A builder measures the diameter of the pipe five times using digital calipers. The measurements are shown.

diameter / mm
48.01
47.99
48.01
48.00
47.99

What describes the builder's measurements?

A accurate and precise

B accurate but not precise

C not precise and not accurate

D precise but not accurate

4 Two forces, each of 10 N, act at a point P, as shown. The angle between the directions of the forces is 120°.

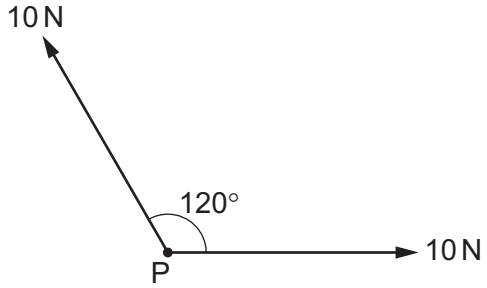

What is the magnitude of the resultant force?

A 5 N **B** 10 N **C** 17 N **D** 20 N

5 One object moves directly from P to R.

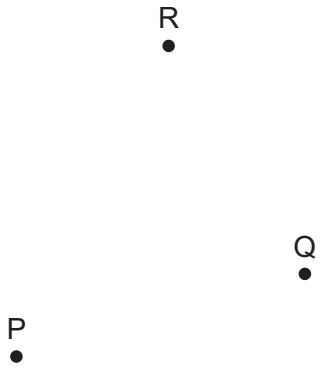

In a shorter time, a second object moves from P to Q to R.

Which statement about the two objects is correct for the journey from P to R?

A They have the same average speed.

B They have the same average velocity.

C They have the same displacement.

D They travel the same distance.

6 A ball is kicked so that it has an initial velocity of $12\,m\,s^{-1}$ at an angle of 50° to horizontal ground.

Assume that air resistance is negligible.

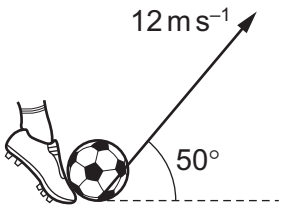

What is the maximum height above the ground that is reached by the ball?

A 0.47 m **B** 3.0 m **C** 4.3 m **D** 7.3 m

© UCLES 2023

7 A camera drone of mass 1.20 kg hovers at a fixed point above the ground. The drone has four propellers.

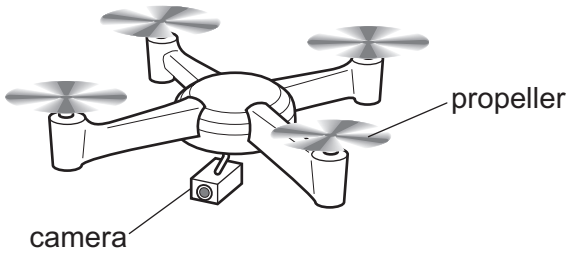

In a time of 1.00 s, each propeller pushes a mass of 0.400 kg of air vertically downwards.

Assume that the air above the propellers is stationary.

What is the speed of the air leaving each propeller?

A $0.750\,m\,s^{-1}$ **B** $3.00\,m\,s^{-1}$ **C** $7.36\,m\,s^{-1}$ **D** $29.4\,m\,s^{-1}$

8 A box rests on the Earth, as shown.

Newton's third law describes how forces of the same type act in pairs. One of the forces of a pair is the weight *W* of the box.

Which arrow represents the other force of this pair?

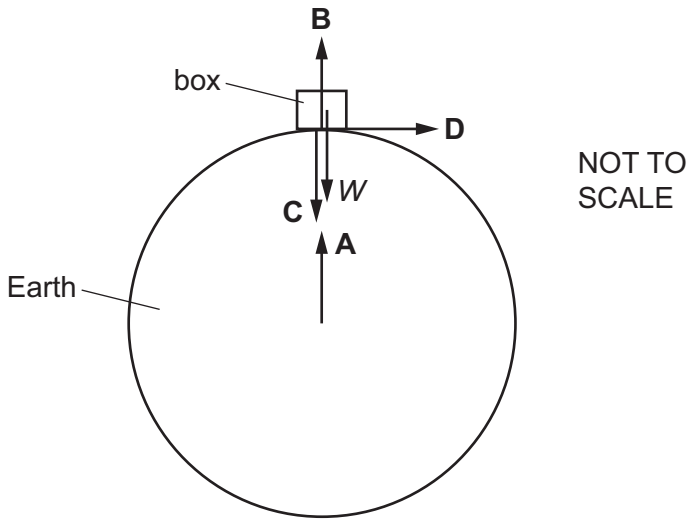

9 A small ball is held at the surface of liquid oil in a container. The ball is released from rest and falls through the oil. The ball has velocity v. A viscous (drag) force F acts on the ball.

Which graph could show the variation with v of F?

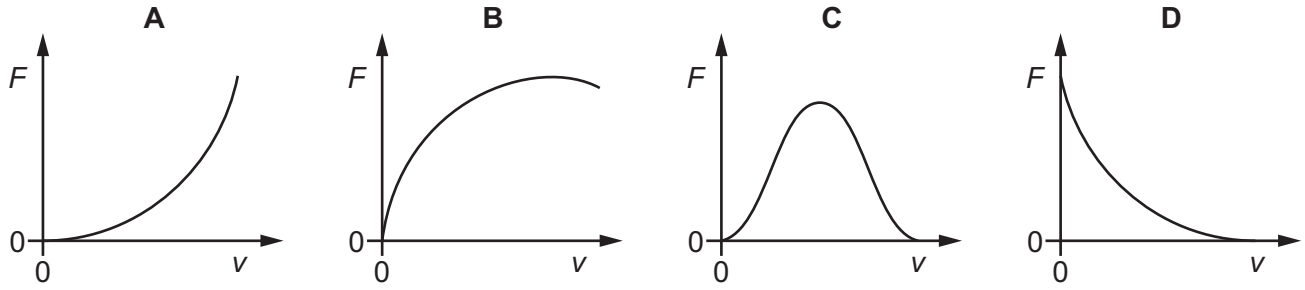

10 An object of mass m, moving at speed u along a frictionless horizontal surface, collides head-on with a stationary object of mass $4m$.



before the collision

After the collision, the object of mass m rebounds along its initial path with $\frac{1}{4}$ of its kinetic energy before the collision.

What is the speed of the object of mass $4m$ after the collision?

A $\frac{u}{8}$ **B** $\frac{3u}{16}$ **C** $\frac{5u}{16}$ **D** $\frac{3u}{8}$

11 The driver of a car applies two parallel forces to a steering wheel, as shown.

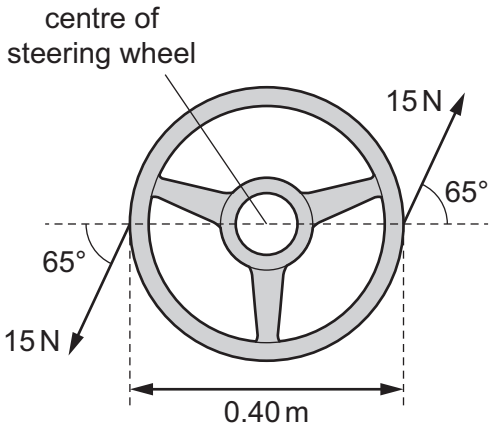

Each force has a magnitude of 15 N and acts in the direction shown. The steering wheel has a diameter of 0.40 m.

What is the torque exerted on the steering wheel?

A 1.3 N m **B** 2.5 N m **C** 2.7 N m **D** 5.4 N m

© UCLES 2023

12 A farmer is trying to lift the corner of a large water tank. She uses a metal rod as a lever.

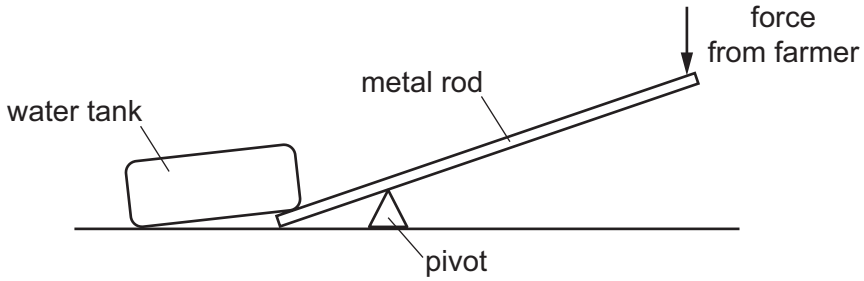

The vertical force from the farmer is constant and is always applied to the end of the rod.

Which change **must** increase the upward force on the water tank?

A using a longer rod and moving the pivot closer to the tank

B using a longer rod and moving the pivot further away from the tank

C using a shorter rod and moving the pivot closer to the tank

D using a shorter rod and moving the pivot further away from the tank

13 The diagram shows a ball of weight W hanging in equilibrium from a string.

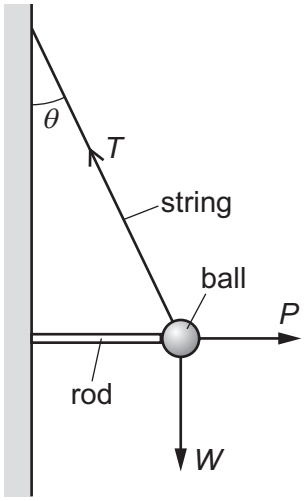

The string is at an angle θ to the vertical. The tension in the string is T. The ball is held away from the wall by a horizontal force P from a metal rod.

Which relationship between the magnitudes of T, P and W is correct?

A $P = T\cos\theta$ and $W = T\sin\theta$

B $T = P + W$

C $T^2 = P^2 + W^2$

D $W = P\tan\theta$ and $W = T\cos\theta$

© UCLES 2023

14 Which expression for pressure is correct?

A force per unit area

B force per unit volume

C mass per unit area

D mass per unit volume

15 A ball has a mass of 0.50 kg and a volume of $1.3 \times 10^{-3}\,m^3$. The ball is floating in equilibrium on still water. The two forces that act on the ball are its weight and the upthrust due to the water.

The density of the water is $1.0 \times 10^{3}\,kg\,m^{-3}$.

What is the percentage of the volume of the ball above the surface of the water?

A 3.9% **B** 38% **C** 62% **D** 96%

16 A man sits on a buggy that is pulled along by a wire attached to a kite. The wire is at an angle of 40° to the horizontal and has a constant tension of 200 N. The man and buggy travel a distance of 20 m along a straight horizontal path. The wire and the path of the buggy are in the same vertical plane.

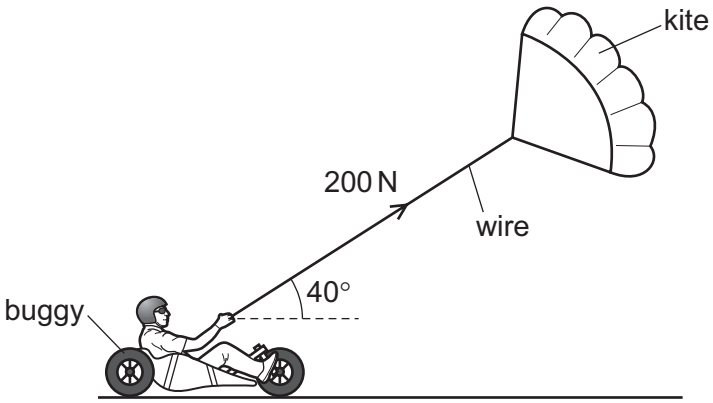

What is the work done by the tension force on the man and buggy?

A 2.6 kJ **B** 3.1 kJ **C** 3.4 kJ **D** 4.0 kJ

17 A ball is thrown vertically upwards from the surface of the Earth.

Which statement describes the energy of the ball as it rises through the air?

A The kinetic energy of the ball decreases as the gravitational potential energy decreases.

B The kinetic energy of the ball decreases as the gravitational potential energy increases.

C The kinetic energy of the ball increases as the gravitational potential energy decreases.

D The total energy of the ball increases.

© UCLES 2023

18 A lamp is suspended in equilibrium from a fixed support by three long identical wires.

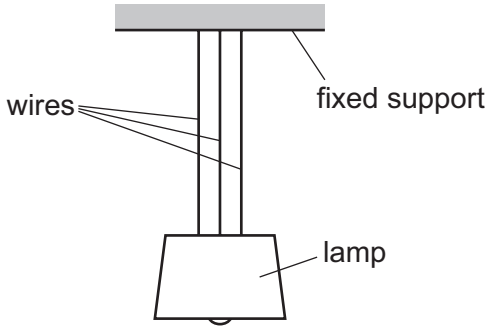

The weight of the lamp causes each wire to have an extension of 0.40 cm. The height *h* of the lamp above the floor is measured.

The middle wire suddenly breaks and the lamp falls a small distance as the extensions of the remaining two wires increase. The wires obey Hooke's law.

When the lamp is in equilibrium, the height *h* of the lamp above the floor is measured again.

What is the difference between the two values of *h*?

A 0.20 cm **B** 0.27 cm **C** 0.40 cm **D** 0.60 cm

19 The force–extension graph for a spring is shown.

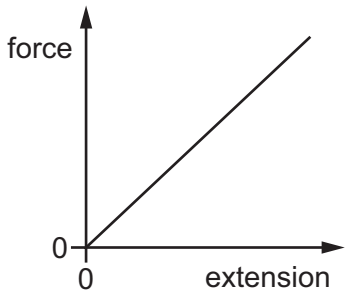

What represents the work done to extend the spring?

A the area under the graph

B the gradient of the graph

C the reciprocal of the gradient of the graph

D twice the area under the graph

20 In an experiment, a student uses a microphone and a cathode-ray oscilloscope (CRO) to analyse a sound wave. The diagram shows the trace on the screen of the CRO.

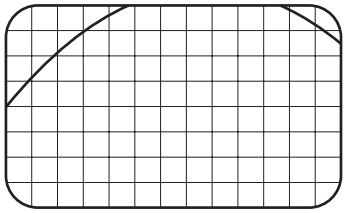

The student is expecting a sinusoidal waveform to be shown on the screen.

Which changes should the student make to the time-base and the *y*-gain of the CRO so that the screen shows a continuous trace for one complete cycle of the waveform?

	time-base	*y*-gain
A	decrease	decrease
B	decrease	increase
C	increase	decrease
D	increase	increase

21 The graph shows the variation with time of the displacement of a particle in a progressive wave.

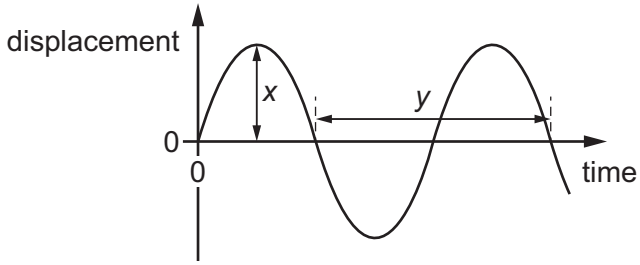

Two measurements, *x* and *y*, are labelled on the graph.

What do *x* and *y* represent?

	x	*y*
A	amplitude	period
B	frequency	period
C	amplitude	wavelength
D	frequency	wavelength

22 A car travels at a constant speed along a straight line PQ.

A loudspeaker attached to the car emits sound of constant frequency *f*. A stationary observer is at point O.

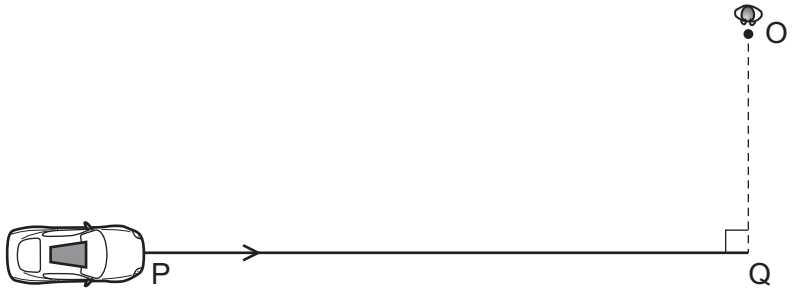

What does the observer hear as the car moves from P towards Q?

A a frequency less than *f* that decreases as the car moves from P towards Q

B a frequency less than *f* that increases as the car moves from P towards Q

C a frequency more than *f* that decreases as the car moves from P towards Q

D a frequency more than *f* that increases as the car moves from P towards Q

23 Some sources of electromagnetic waves in free space are listed.

1 a radio wave transmitter

2 a source of X-rays

3 a 30 mm wavelength radar transmitter

4 a light-emitting diode that emits red light

Which list gives the sources in order of increasing wavelength, from left to right, of the waves emitted by the sources?

A $1 \rightarrow 3 \rightarrow 4 \rightarrow 2$

B $2 \rightarrow 4 \rightarrow 1 \rightarrow 3$

C $2 \rightarrow 4 \rightarrow 3 \rightarrow 1$

D $3 \rightarrow 1 \rightarrow 4 \rightarrow 2$

© UCLES 2023

24 A vertically polarised beam of light is incident normally on a polarising filter. The transmission axis of the filter is at an angle of 40° to the horizontal.

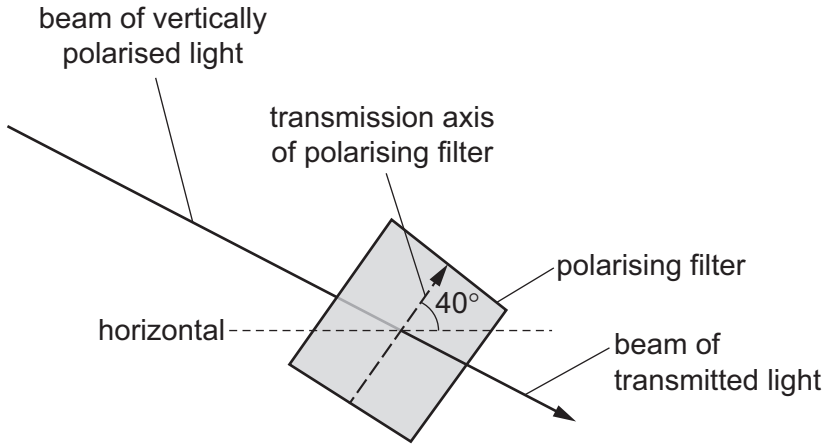

What is the ratio $\frac{\text{amplitude of transmitted beam}}{\text{amplitude of incident beam}}$?

A 0.41 **B** 0.59 **C** 0.64 **D** 0.77

25 Two progressive waves meet at a point.

Which condition must be met for superposition of the waves to occur?

A The waves must be coherent.

B The waves must be of the same type.

C The waves must be travelling in opposite directions.

D The waves must meet in phase.

26 A string is stretched between a vibration generator and a fixed point.

When the vibration generator is vibrating at a frequency *f*, a stationary wave with five nodes is created on the stretched string, as shown. There is a node at the end of the string that is attached to the vibration generator.

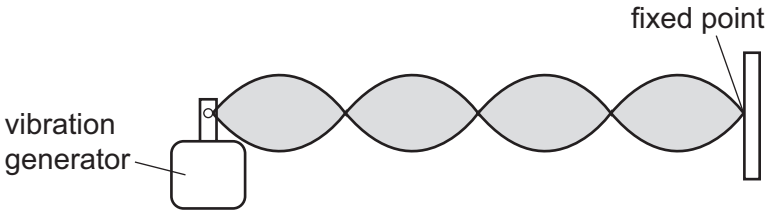

The frequency of vibration of the vibration generator is slowly increased.

What is the next frequency that produces a stationary wave on the string?

A 1.25*f* **B** 1.50*f* **C** 1.75*f* **D** 2.00*f*

© UCLES 2023

27 A ripple tank and a barrier with a single gap are used to demonstrate the diffraction of surface ripples on water. Initially, the wavelength of the ripples is five times smaller than the gap in the barrier.

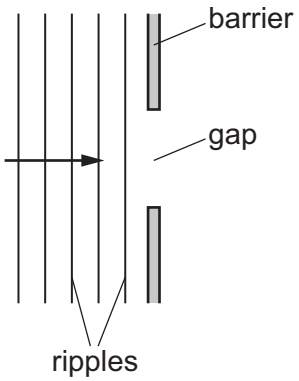

Which change increases the amount of diffraction observed?

A double the amplitude of the ripples

B double the width of the gap

C halve the frequency of the ripples

D halve the wavelength of the ripples

28 A laser produces a beam of light of wavelength 650 nm. The beam is incident normally on two slits that are a distance of 0.12 mm apart.

A screen is placed parallel to the slits. The bright interference fringes on the screen have a separation of 7.5 cm.

What is the distance between the screen and the two slits?

A 1.4 m **B** 2.8 m **C** 7.0 m **D** 14 m

29 A beam of light from a laser is incident normally on a diffraction grating.

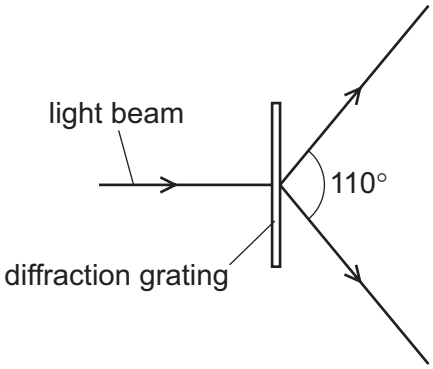

The diagram shows only the **second**-order maxima that are produced.

The grating has a line spacing of 1.0×10^{-6} m. The angle between the two second-order maxima is 110°.

What is the wavelength of the light?

A 4.1×10^{-7} m

B 4.7×10^{-7} m

C 8.2×10^{-7} m

D 9.4×10^{-7} m

30 The electric current in a metal wire is 4.0 mA.

How many electrons pass a fixed point in the wire in a time of 10 hours?

A 2.5×10^{17} **B** 2.5×10^{20} **C** 9.0×10^{20} **D** 9.0×10^{23}

31 What is the definition of the potential difference across an electrical component?

A the charge per unit time passing through the component

B the energy transferred per unit charge

C the force per unit charge

D the resistance per unit current

32 Which graph shows the *I*–*V* characteristic of a filament lamp?

A

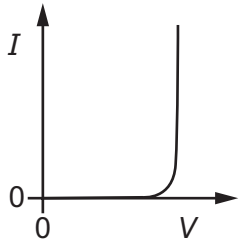

B

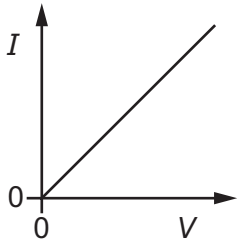

C

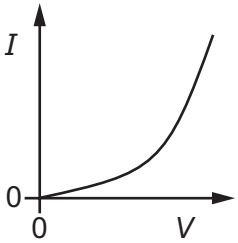

D

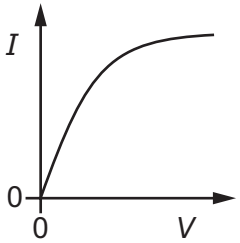

© UCLES 2023

33 A metal wire has a length of 2.50 m and a cross-sectional area of $4.50 \times 10^{-6}\,m^2$. The resistivity of the metal is $3.50 \times 10^{-7}\,\Omega m$.

The wire is stretched so that its length increases to 2.65 m. The wire remains cylindrical and the **volume** of the wire remains constant.

What is the change in the resistance of the wire?

A $0.012\,\Omega$ **B** $0.024\,\Omega$ **C** $0.19\,\Omega$ **D** $0.22\,\Omega$

34 Which circuit symbol represents a microphone?



35 A battery with internal resistance is connected to a fixed resistor, an ammeter and a voltmeter, as shown.

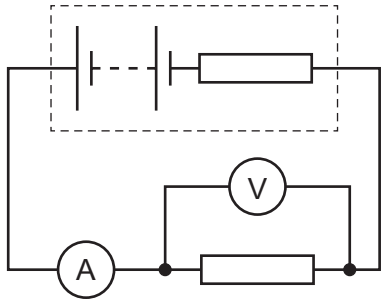

The battery is replaced by a different battery that has the same electromotive force (e.m.f.) but a greater internal resistance.

What happens to the readings on the ammeter and voltmeter?

	ammeter reading	voltmeter reading
A	decreases	decreases
B	decreases	stays the same
C	stays the same	decreases
D	stays the same	stays the same

36 Four potential divider circuits each consist of a battery of electromotive force (e.m.f.) 9 V and negligible internal resistance connected to a combination of resistors. Each of the resistors in the circuits has a resistance of X or $2X$.

Which circuit has the largest output voltage V?

A

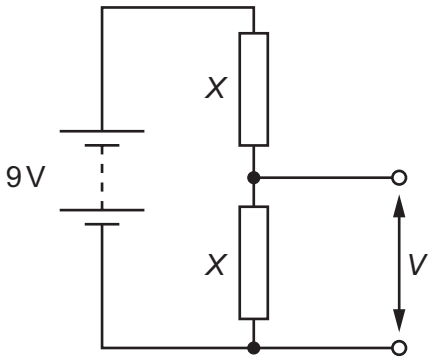

B

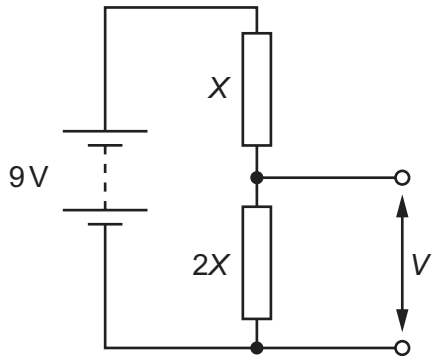

C

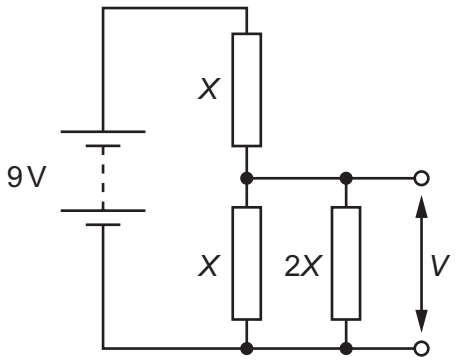

D

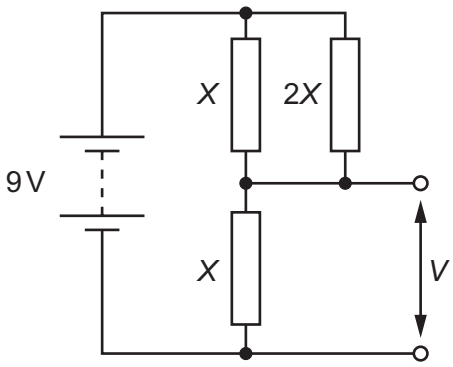

© UCLES 2023

37 A voltmeter is connected into a circuit with the polarity shown.

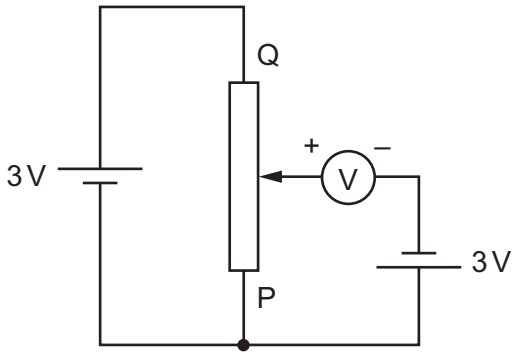

The sliding contact is moved to end P of the potentiometer and then to end Q.

What are the two readings of the voltmeter?

	sliding contact at end P	sliding contact at end Q
A	0 V	3 V
B	0 V	6 V
C	3 V	3 V
D	3 V	6 V

38 A proton has mass m_p and charge $+e$.

What are the mass and charge of an antiproton?

	mass	charge
A	$-m_p$	$+e$
B	$-m_p$	$-e$
C	m_p	$+e$
D	m_p	$-e$

39 A uranium nucleus has 92 protons and 143 neutrons.

The nucleus emits a total of 3 α-particles and 4 β^- particles to form nucleus X.

How can nucleus X be represented?

A $^{131}_{90}X$ **B** $^{219}_{87}X$ **C** $^{223}_{82}X$ **D** $^{223}_{90}X$

© UCLES 2023

40 Which statement about a proton is correct?

A A proton is a baryon but not a meson.

B A proton is a meson but not a hadron.

C A proton is both a hadron and a meson.

D A proton is both a meson and a baryon.

© UCLES 2023

BLANK PAGE

BLANK PAGE

Permission to reproduce items where third-party owned material protected by copyright is included has been sought and cleared where possible. Every reasonable effort has been made by the publisher (UCLES) to trace copyright holders, but if any items requiring clearance have unwittingly been included, the publisher will be pleased to make amends at the earliest possible opportunity.

To avoid the issue of disclosure of answer-related information to candidates, all copyright acknowledgements are reproduced online in the Cambridge Assessment International Education Copyright Acknowledgements Booklet. This is produced for each series of examinations and is freely available to download at www.cambridgeinternational.org after the live examination series.

Cambridge Assessment International Education is part of Cambridge Assessment. Cambridge Assessment is the brand name of the University of Cambridge Local Examinations Syndicate (UCLES), which is a department of the University of Cambridge.

© UCLES 2023